SUN VALLEY ELECTRIC MFG., INC.
1334 N. 21 ST. AVE. PHX. AZ. 85009
602-258-6448 FAX# 602-254-6923

*U.L. LISTED DEADFRONT SWITCHBOARD E84151
*NEMA 3R RATED UNLESS NOTED OTHERWISE
*ALUMINUM BUS WITH ALSTAN 80 PLATING
*ANSI 61 LIGHT GREY POWDER COATED FINISH

JOB ADDRESS: _
_

DATE:

CONTRACTOR:
DISTRIBUTOR:
P.O. NUMBER:
SVE S.O. #:
VOLTAGE: 120/240V 1PH/3W 800AMP

UTILITY:
AIC: 100kAIC

underground pull sections may be field installed either left or right
meter sections may be field installed in any position

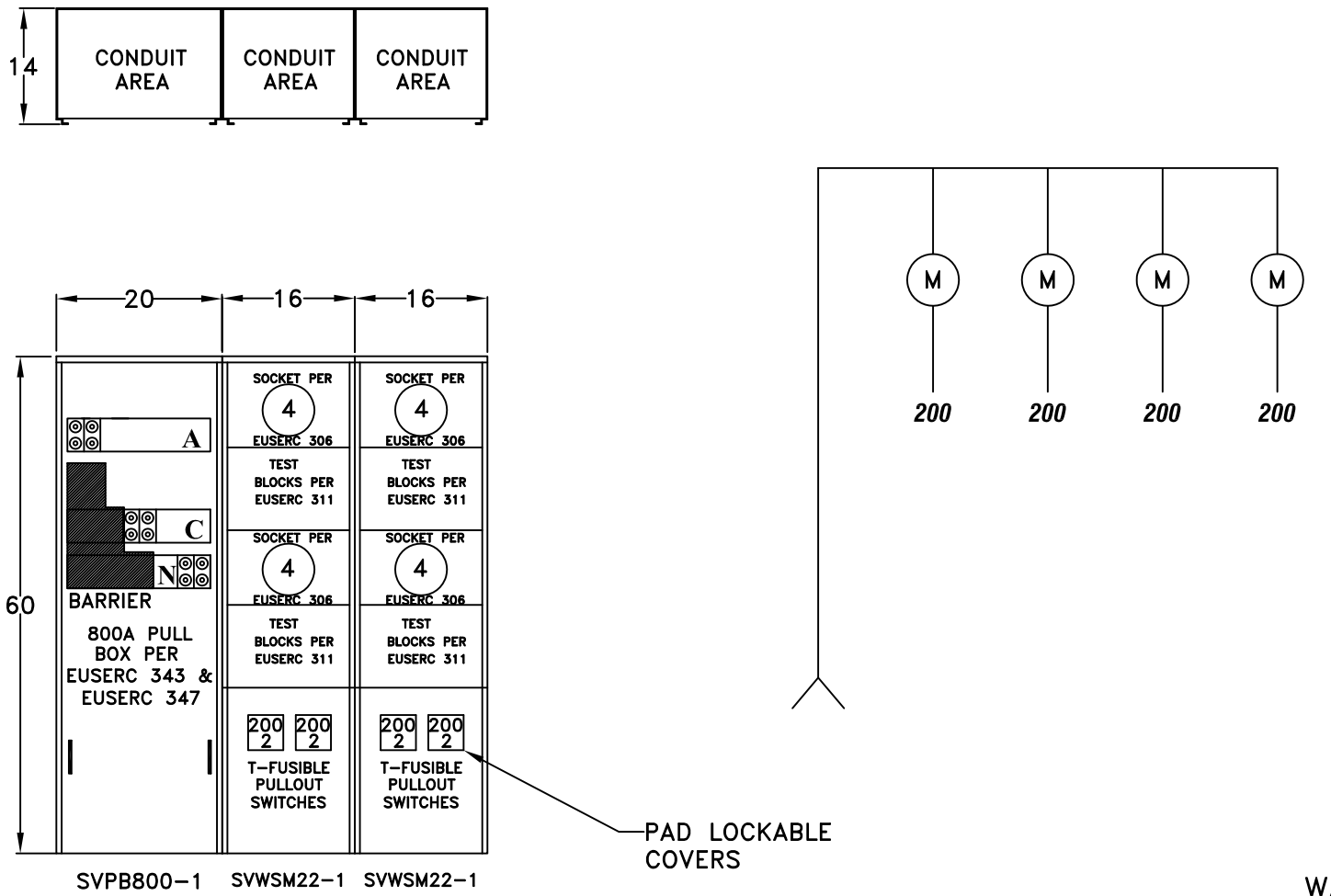

WALL MT
UNDERGROUND FEED